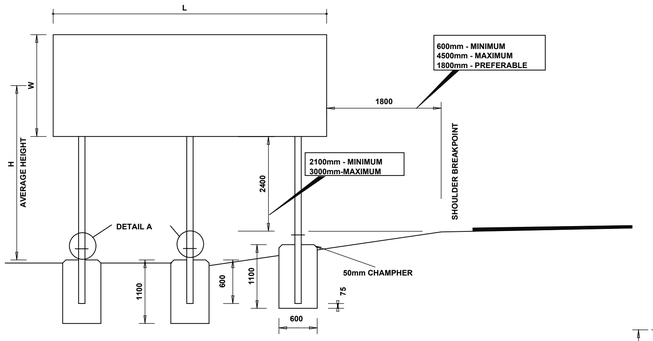

FRONT ELEVATION

NTS

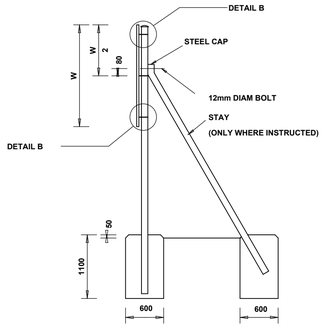

SIDE ELEVATION

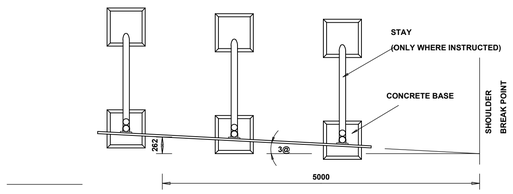

PLAN

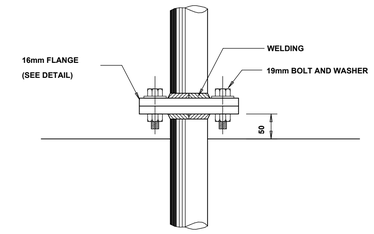

SIDE

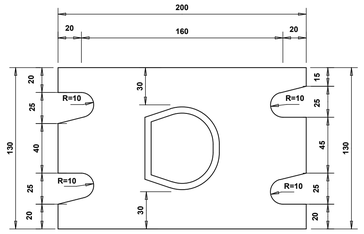

DETAIL OF FLANGE

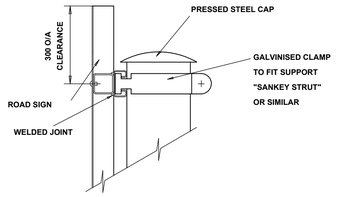

DETAIL C

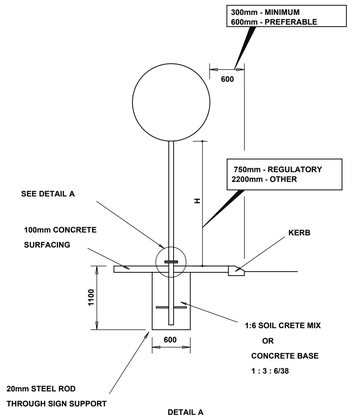

DETAIL A

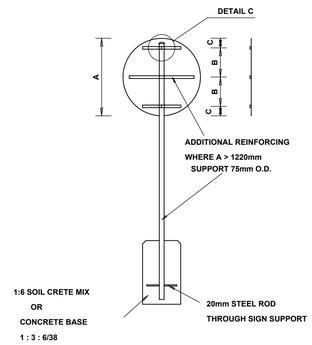

REINFORCING OF REGULATORY SIGNS

4,8mm DIAM CADMIUM COATED
MILD STEEL RIVETS
8mm LONG at 150mm c/c
RIVET HEADS ON SIGN
FACE TO BE PAINTED
SAME COLOUR TO SUIT

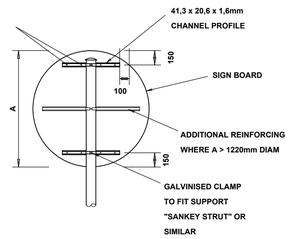

BACK ELEVATION

A	NUMBER REINFORCEMENTS	B	C
914 1220	2 3	514 460	200 150

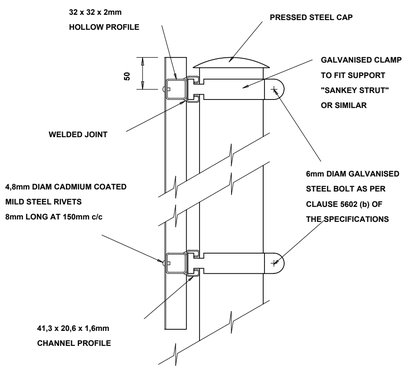

SIDE ELEVATION

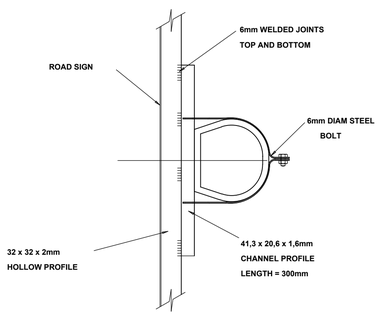

PLAN

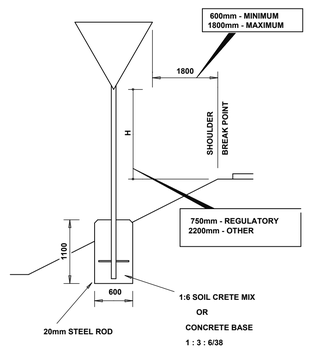

THROUGH SIGN SUPPORT

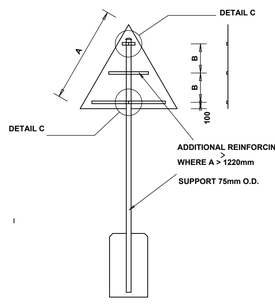

REINFORCING FOR WARNING SIGNS

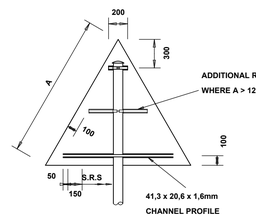

BACK ELEVATION

NTS

A	NUMBER REINFORCEMENTS	B
914 1220 1524	2 3 3	572 420 550

RIVET HEADS ON SIGN
FACE TO BE PAINTED
SAME COLOUR TO SUIT

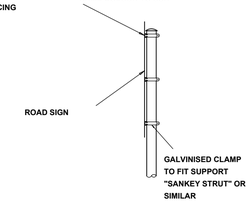

SIDE ELEVATION

REV	DATE	REVISION DESCRIPTION	DRAWN

TS Consulting
POLOKWANE OFFICE
06 HANS VAN RENSBURG, SUITE 11
POLOKWANE
0700
TEL: +27 (0)15 291 43 65
FAX: +27 (0)15 291 5392
REG. No. 2008/304484/23

DISCIPLINE: ENGINEERING SERVICE

THE MASTER HELD AT THE TS CONSULTING POLOKWANE BEARS THE ORIGINAL SIGNATURE OF APPROVAL.

CLIENT: LEPELLE-NKUMPI MUNICIPALITY
PRIVATE BAG X07
CHUENESPOORT
0745
TEL (015) 633-4500
FAX (015) 633-6896

PROJECT DESCRIPTION: LNM057/2016/17 : CONSTRUCTION OF VEHICLE TESTING STATION (VTS)

DRAWING TITLE: ROADS AND PARKING

DRAWING TITLE: ROAD SIGN ERECTION DETAIL

FUNCTION	NAME	SIGNATURE
DESIGNED BY	PD NELUHENI	
DRAWN BY	LB LEKHULENI	
DESIGN CHECKED BY	PD NELUHENI	
DRAWING CHECKED BY	PD NELUHENI	
APPROVAL - CONSULTANT		
NAME: PD NELUHENI	SIGNATURE	
DATE	PROFESSIONAL REG No.	

DRAWING STATUS CODES:
P/I=PRELIMINARY C=CONSTRUCTION
D=DESIGN A=AS-BUILT/RECORD
T=TENDER

FIRST ISSUE DATE: YYYY-MM-DD
SCALE: NTS
SHEET: 1 OF 1
SHEET SIZE: A1

TS DRAWING NUMBER

TS PROJ. No.	SUB-No.	DISCIPLINE	NUMBER	STATUS	REVISION
TS/LNM057/2016/17	01	04	08	C	--

COPYRIGHT RESERVED